17305

15116

4 Hours / 100 Marks Seat No. | | | | | | | | |

Instructions : *(1)* ***All*** *questions are* ***compulsory****.*
(2) Illustrate your answers with neat sketches ***wherever*** *necessary.*
(3) Figures to the ***right*** *indicate* ***full*** *marks.*
(4) Assume suitable data, if ***necessary****.*

Marks

1. A) Sketch the conventional representations of **any six** of the following : **(6×2=12)**

a) Half section.

b) Ball bearing.

c) Woodruf key.

d) Spur gear.

e) Helical compressing spring with flat ends.

f) Sprocket wheel.

g) Internal screw threads.

h) Reducing socket.

B) Attempt **any two** of the following : **(2×4=8)**

a) Two MS plates of 12 mm thickness are to be welded by 'U' butt weld with flush finish. Represent the arrangement with proper symbols.

b) With a neat sketch represent following terms used for limits and fits :

i) Basic size

ii) Lower deviation of shaft

iii) Tolerance zone of hole

iv) Zero line

c) Show machining symbols to represent direction of lay for the following :

i) Approximately radial relative to the center of the surface.

ii) Parallel to the plane of projection of the view.

P.T.O.

Marks

2. A) Figure 1 shows the front view, incomplete top view and partial auxiliary view of a machine part. Using the given views complete the top view of the object. **(1×12=12)**

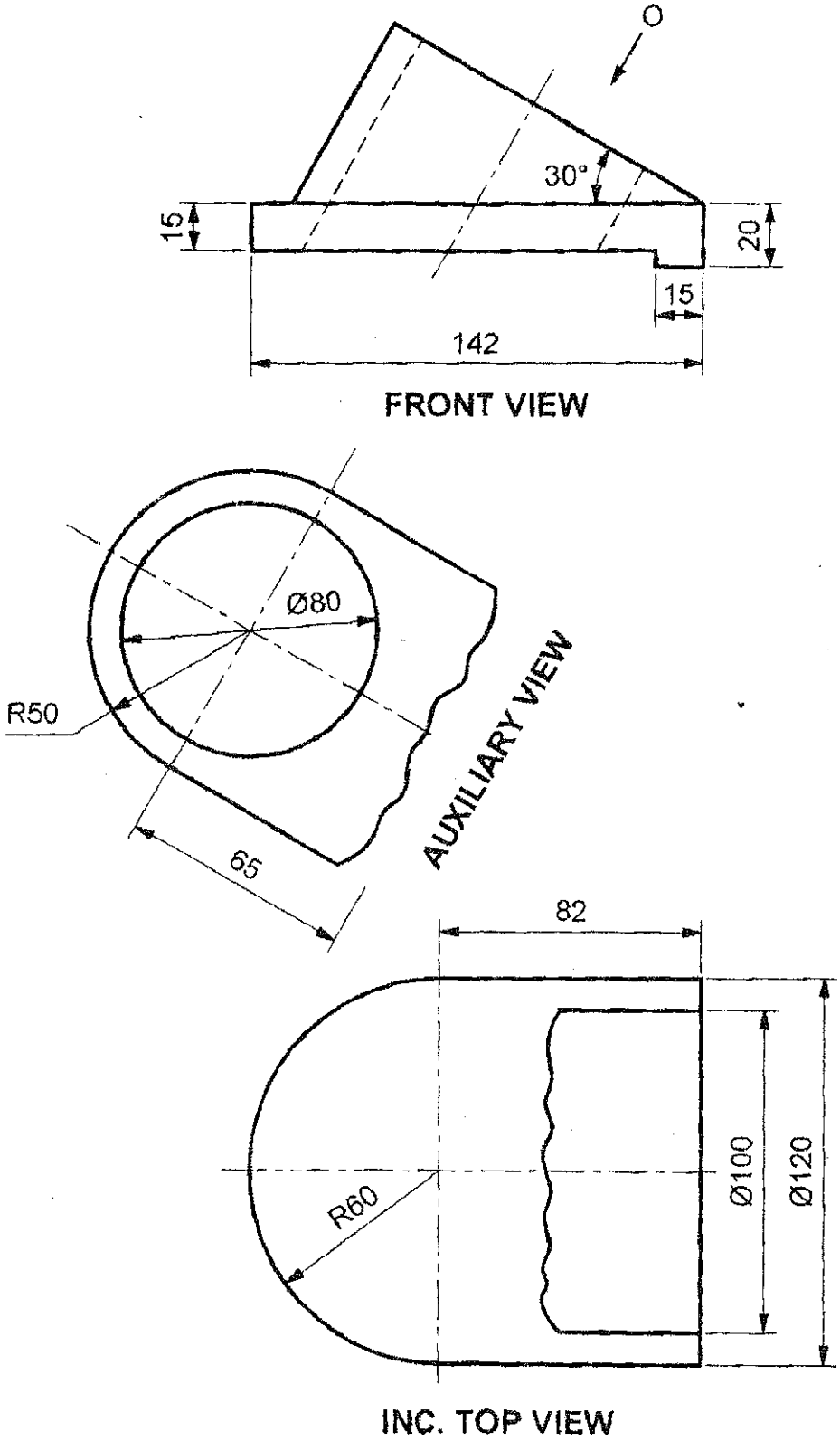

Figure 1

Marks

B) Attempt **any two** of the following : **(2×4=8)**

a) Represent with a neat sketch the surface roughness with following parameters.

i) Roughness value 12.5 μm.

ii) Parallel direction of lay.

iii) Machining by milling.

iv) Sampling length of 0.8 mm.

b) Giving symbols illustrate.

i) convex fillet weld

ii) flat double v-butt weld.

c) Sketch the symbols for following features which are used in geometrical tolerancing :

i) Concentricity

ii) Angularity

iii) Symmetry

iv) Flatness.

3. Attempt **any two** of the following : **(2×10=20)**

a) A cone with the diameter of base 80 mm and height 90 mm is resting on H.P. on its base. A hole of 50 mm diameter is drilled through the cone. The axis of the hole is 28 mm above and parallel to the base of the cone. The axis of the hole is parallel to V.P. also. Draw three views of cone showing lines of intersection of hole with cone.

b) A vertical square prism of side of base 40 mm, axis height 75 mm has its faces equally inclined to V.P. A cylinder of diameter 40 mm and length 75 mm intersects the prism horizontally such that its axis bisects the axis of the prism. The plane containing the axes of both the solids is parallel to V.P. Draw the projections of solids showing curves of intersection.

c) A vertical square prism, side of base 35 mm and 80 mm long has its vertical faces equally inclined to V.P. It is penetrated by another square prism side of base 35 mm and axis length 80 mm so that, its axis is parallel to both H.P. and V.P. and is 10 mm in front of the axis of the vertical prism. The faces of the penetrating prism are equally inclined to H.P. Draw the projections of the prisms showing the lines of intersection.

Marks

4. Attempt **any one** of the following : **(1×20=20)**

a) Figure 2 shows the details of foot step bearing. Draw the following views of assembly :

i) Sectional front view. **10**

ii) Top view. **8**

iii) Prepare bill of materials. **2**

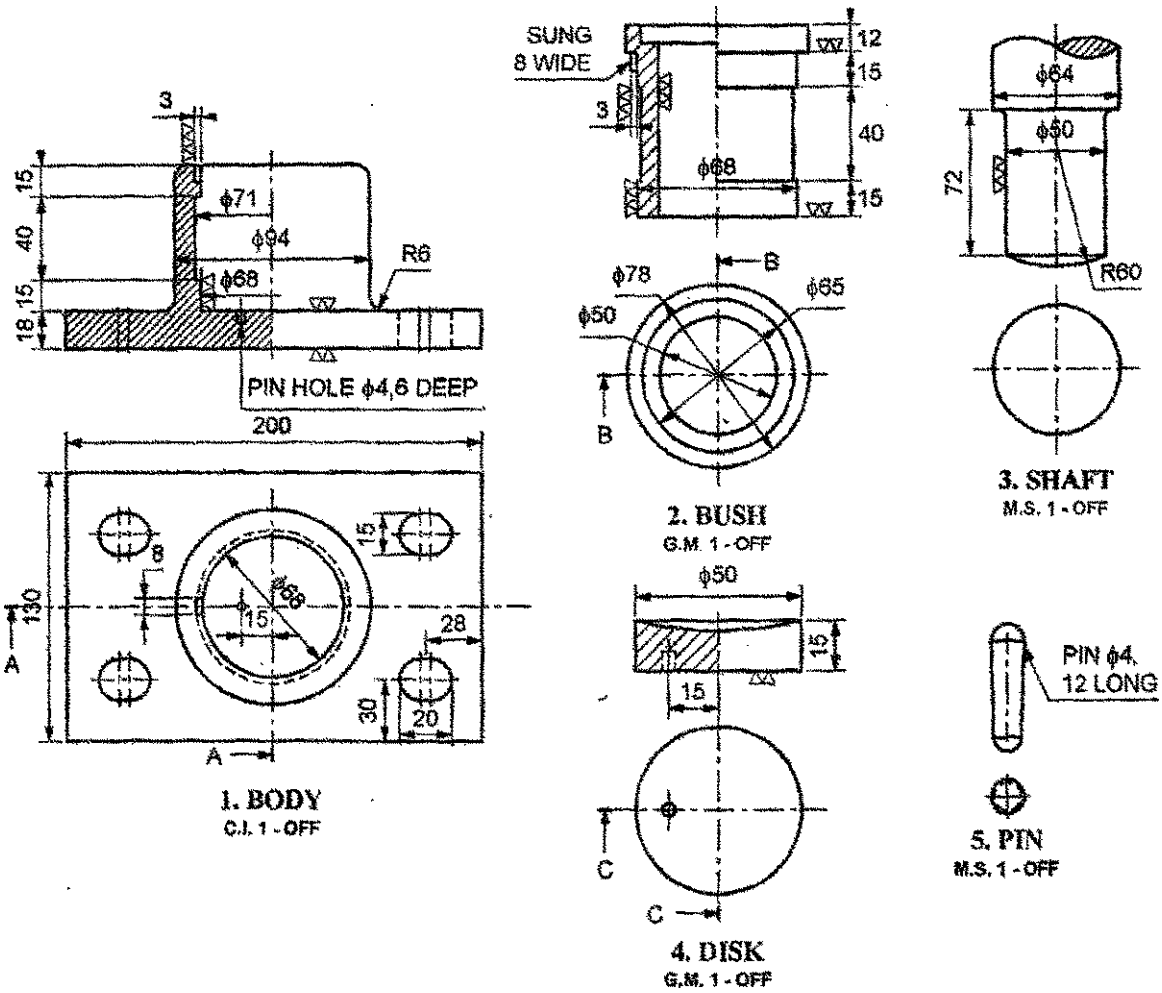

Figure 2

Marks

b) Figure 3 shows the details of universal coupling. Draw the following views of assembly.

i) Sectional front view. **10**

ii) Top view. **8**

iii) Prepare bill of materials. **2**

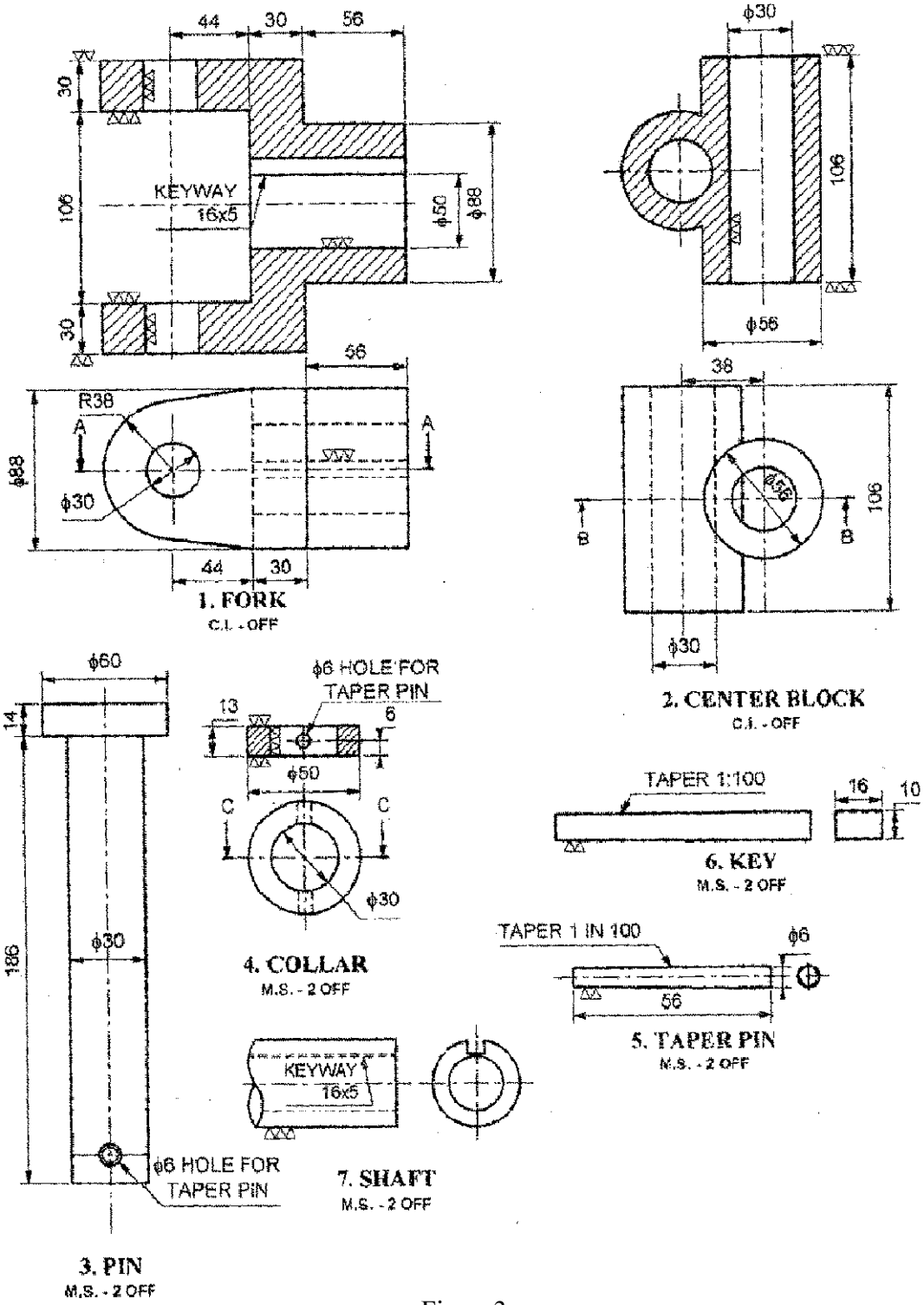

Figure 3

Marks

5. Attempt **any one** of the following : **(1×20=20)**

a) Figure 4 shows the half sectional front view and side view of an assembly of crosshead. Draw the part drawings of the components.

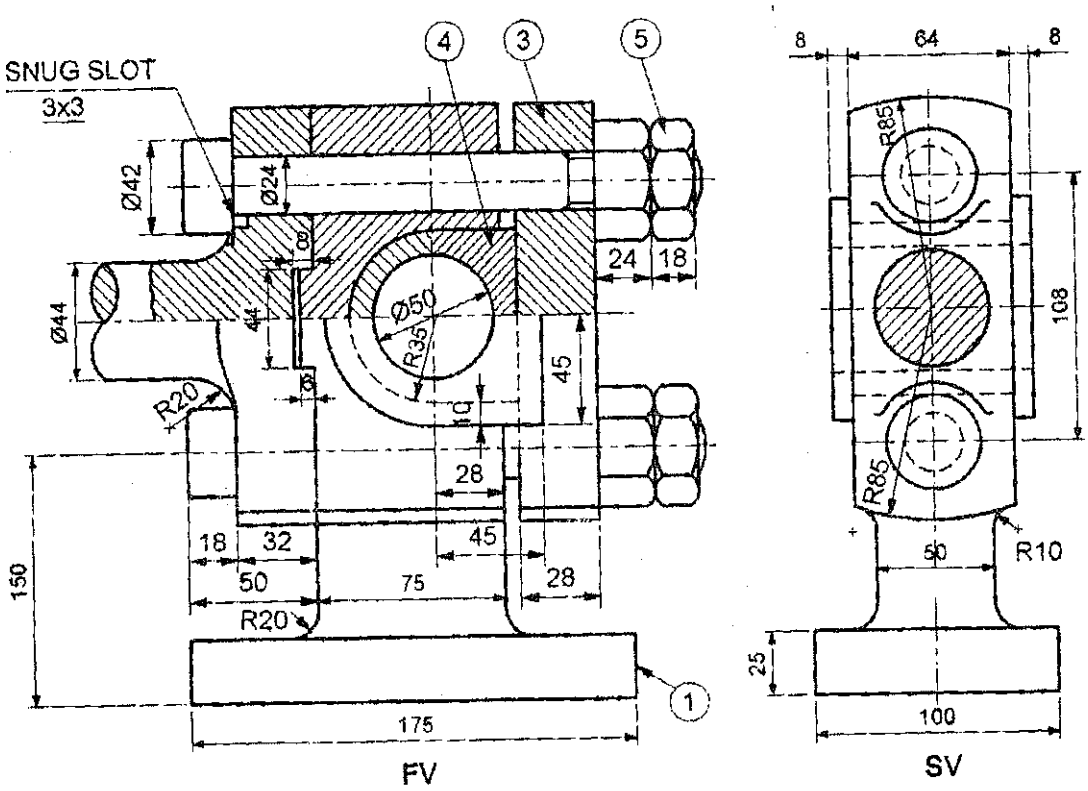

PART LIST

PART NO.	PART NAME	MATL.	QTY.
1	CROSS BODY	C.I.	1
2	PISTON ROD END	C.I.	1
3	CAP	C.I.	1
4	BRASS (TWO HALVES)	G.M.	1
5	ROUND HEAD NUT & BOLT	M.S.	2

Assembly of crosshead

Figure 4

b) Figure 5 shows the sectional front view and side view of a fast and loose pulley. Draw the part drawings of the components.

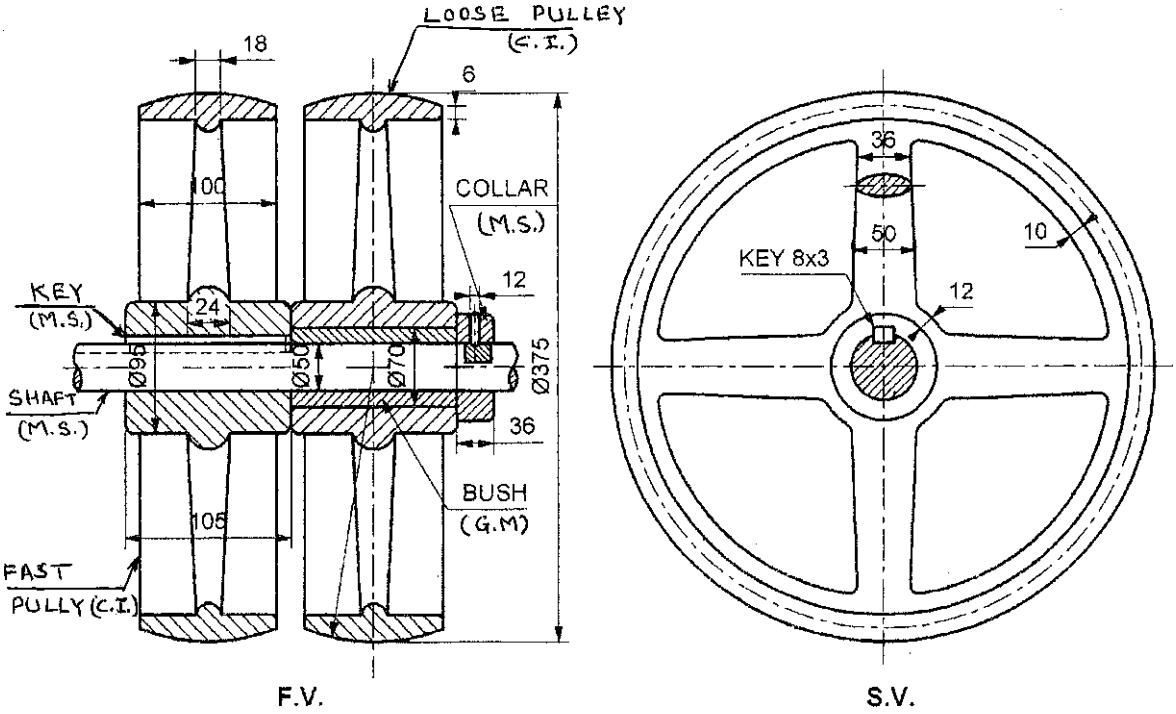

Figure 5